AUDIOACCESS

MA-362

TWELVE CHANNEL AMPLIFIER

PRELIMINARY SERVICE MANUAL

Harman Consumer Group
250 Crossways Park Dr.
Woodbury, New York 11797

MA-362

Audioaccess® Twelve Channel Amplifier

The Audioaccess MA-362 Twelve Channel Amplifier represents a high value approach while providing twelve channels of clean amplifier power for multi-room system applications.

Power to Spare

With a power rating of 50 Watts per channel at 8 Ohms from 20Hz to 20kHz with less than .05% THD, the MA-362 will drive virtually any in-wall loudspeaker to room filling volume. Power into 4 Ohms is even more impressive at 75 Watts per channel. All channels may be bridged if additional power is required. Cool operation is ensured with a design incorporating heat sinks, flow through ventilation and low-noise fans.

After a series of careful evaluations and tests, Madrigal has chosen to implement a conservative and proven design philosophy with the MA-362 with the added benefit of improved sound quality and long component life. Power for each channel is delivered by a pair of high current output transistors capable of delivering over 200 watts, much higher power than the rated 50 watts per channel. For example, the output transistors for each channel can handle up to 12 amps. At rated power, the MA-362 is drawing only about 3 amps of current per channel, ensuring its reliable performance.

Control Capabilities

Each pair of channels is controlled by a Trigger Source Selector, a three-position switch that selects signal sensing, voltage trigger input or link (to the trigger signal of the zone to the immediate left) as the source for muting control within each individual zone. A two position Signal Link Selector, is also provided and is used to link a zone to the Signal Input connector of the zone to its left.

Installation Flexibility

Ease of installation, a hallmark of all Audioaccess products is maintained in the new MA-362. An external speaker termination board can be ordered in advance to allow the installing dealer to "pre-wire" all of the loudspeakers in the system before the amplifier is delivered for final installation. Final hook up consists of plugging the speaker termination board into a slot in the rear panel of the amplifier.

Summary

The MA-362 features, performance and reliability make it the perfect amplifier choice for a wide variety of multi-room audio system applications.

AUDIOACCESS
Simply Ingenious

Features

- ▲ Rack mountable chassis
- ▲ Discrete amplifier design for improved sound quality
- ▲ Signal Input Connector: six dual RCA jacks, one per two channel
- ▲ Four position switch to select Stereo, Bridged Right, Bridged Left, or mono operation for each zone
- ▲ Independent level controls for each amp channel
- ▲ Trigger Input, euro-style connector, accepts 3 to 24V AC or DC, to "unmute" amp channels in the zone
- ▲ Trigger Source Selector: three position switch to select signal sensing, voltage trigger input or link (to the trigger signal of the zone to the immediate left) to control muting in the zone.
- ▲ Plug-in Speaker Termination Board, a snap for advance installations (available separately, not included with the amplifier)
- ▲ Signal Link Selector: two position switch to link a zone to the signal input connector of the zone to its left (excluding zone 1)
- ▲ Power Switch on Front panel
- ▲ Bi-color LED Power Indicator

Specifications

- ▲ Number of Channels: 12, configured as 6 left/right pairs (zones)
- ▲ Power Output (Unbridged): 50W @ 8Ω, 75W @ 4Ω, 20 - 20k Hz, All Channels Driven
- ▲ Power Output (Bridged): 150W @ 8Ω, 20 - 20k Hz, All Channels Driven
- ▲ THD+Noise: <0.05%, at rated power, 20 - 20k Hz
- ▲ IMD: <0.05% (SMPTE)
- ▲ Frequency Response: 20 - 20k Hz, +0/-0.2 dB, at rated power, 4Ω load
- ▲ Bandwidth: 5 – 75k Hz. +0, -3dB, at rated power, 4Ω load
- ▲ S/N: >100dB unweighted (ref: Rated Power), unbridged into 8Ω
- ▲ Crosstalk: <-70 dB (ref: Maximum Output) between any two channels (no audible crosstalk)
- ▲ Protection: Short Circuit, Over Current, DC, Thermal
- ▲ Muting: Turn on, Turn off, Signal Sensing, and Triggered per zone
- ▲ Input impedance: 24kΩ
- ▲ Input Sensitivity: 1.0 Vrms (with input trim at minimum attenuation)
- ▲ Input Level Trim Range: 20dB
- ▲ Gain: 26dB

Dimensions and weight:

- ▲ Height: 7" (178 mm) (4 rack spaces, not including feet)
- ▲ Width front panel: 19" (483 mm), Width chassis: 17 11/16" (450 mm)
- ▲ Depth: 17 11/16" (450 mm)
- ▲ Weight: 60 lb (27.2 kg) (without carton)

Features, specifications and dimensions are subject to change.

Audioaccess TI-501 Speaker Termination Board (Sold separately)

MADRIGAL®

H A Harman International Company

Audioaccess®
Madrigal Audio Laboratories, Inc.
P.O.Box 781
Middletown, CT 06457-0781
Internet: www.madrigal.com
Fax: 860.346.1540

©2002 Madrigal Audio Laboratories, Inc.

20202AA – SS/MA-362

FEATURES

The Audioaccess MA-362 Twelve Channel Amplifier represents a high value approach while providing twelve channels of clean amplifier power for multi-room system applications.

Power to Spare
With a power rating of 50 Watts per channel at 8 Ohms from 20Hz to 20kHz with less than .05% THD, the MA-362 will drive virtually any in-wall loudspeaker to room filling volume. Power into 4 Ohms is even more impressive at 75 Watts per channel. All channels may be bridged if additional power is required. Cool operation is ensured with a design incorporating heat sinks, flow through ventilation and low-noise fans. After a series of careful evaluations and tests, Madrigal has chosen to implement a conservative and proven design philosophy with the MA-362 with the added benefit of improved sound quality and long component life. Power for each channel is delivered by a pair of high current output transistors capable of delivering over 200 watts, much higher power than the rated 50 watts per channel.

The output transistors for each channel can handle 12 amps of current. At rated power, the MA-362 draws 2.5 amps of current, ensuring ample safe operating area headroom and reliable performance.

Zone Muting Control
Each pair of channels is controlled by a three-position Trigger Source switch to select signal sensing, voltage trigger or link (to the trigger signal of the zone to the immediate left).

Unique Input Bussing
A two position Signal Link switch is also provided for each zone. This allows assignment of direct input to the zone, or to share the source utilized by the zone to its left, eliminating the need for Y-cords to distribute common inputs to multiple zones.

Installation Flexibility
Ease of installation, a hallmark of all Audioaccess products is maintained in the new MA-362. An external speaker termination board can be ordered in advance to allow termination of loudspeakers before the amplifier is delivered for final installation. At final, simply plug the speaker termination board onto the rear panel of the amplifier.

Summary
The MA-362 features, performance and reliability make it the perfect amplifier choice for a wide variety of multi-room audio system applications.

Specifications:

- Number of Channels: 12, configured as 6 left/right pairs (zones)
- Power Output (Unbridged): 50W @ 81Ú2,
- 75W @ 41Ú2, 20 - 20k Hz, All Channels Driven
- Power Output (Bridged): 150W @ 81Ú2,
- 20 - 20k Hz, All Channels Driven
- THD+Noise: <0.05%, at rated power,
- 20 - 20k Hz
- IMD: <0.05% (SMPTE)
- Frequency Response: 20 - 20k Hz, +0/-0.2 dB, at rated power, 41Ú2 load
- Bandwidth: 5 — 75k Hz. +0, -3dB, at rated power, 41Ú2 load
- S/N: >100dB unweighted (ref: Rated Power), unbridged into 81Ú2
- Crosstalk: <-70 dB (ref: Maximum Output) between any two channels (no audible crosstalk)
- Protection: Short Circuit, Over Current, DC, Thermal
- Muting: Turn on, Turn off, Signal Sensing, and Triggered per zone
- Input impedance: 24k1Ú2
- Input Sensitivity: 1.0 Vrms (with input trim at minimum attenuation)
- Input Level Trim Range: 20dB
- Gain: 26dB

- Dimensions and weight:

  Height: 7" (178 mm) (4 rack spaces, not including feet)

  Width front panel: 19" (483 mm), Width chassis: 17 1/16" (450 mm)

  Depth: 17 1/16" (450 mm). Weight: 60 lb (27.2 kg) (without carton)

  Features, specifications and dimensions are subject to change.

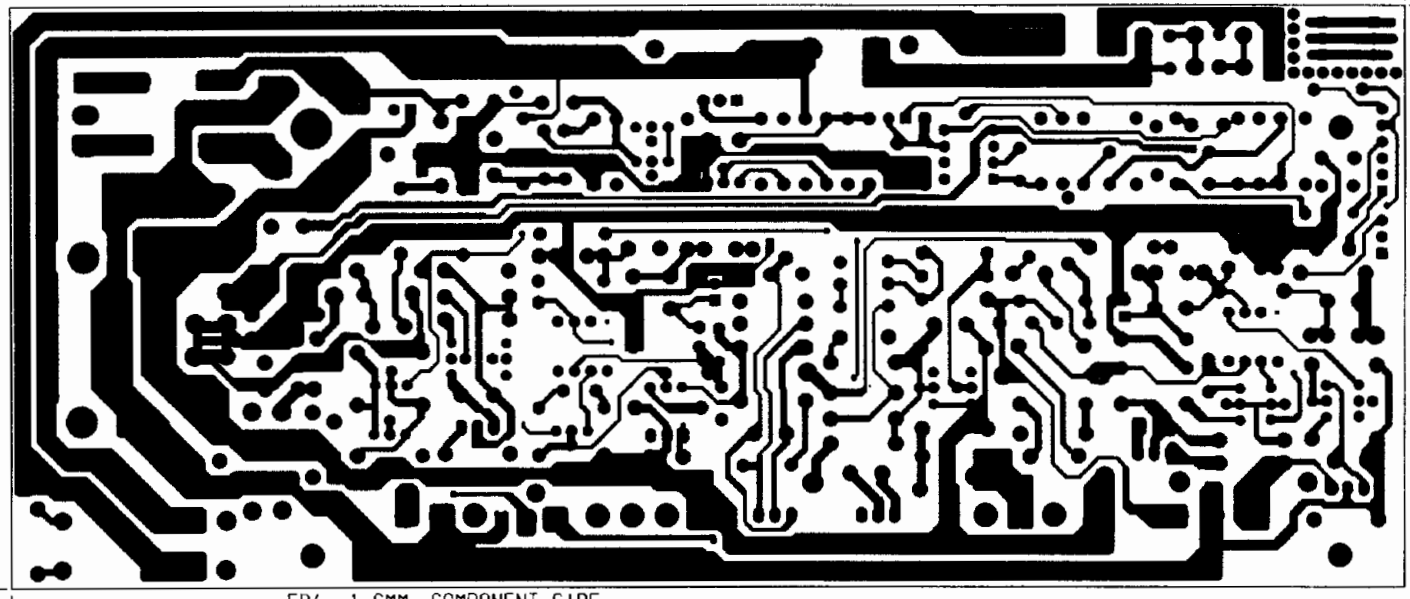

FR4- 1.6MM COMPONENT SIDE

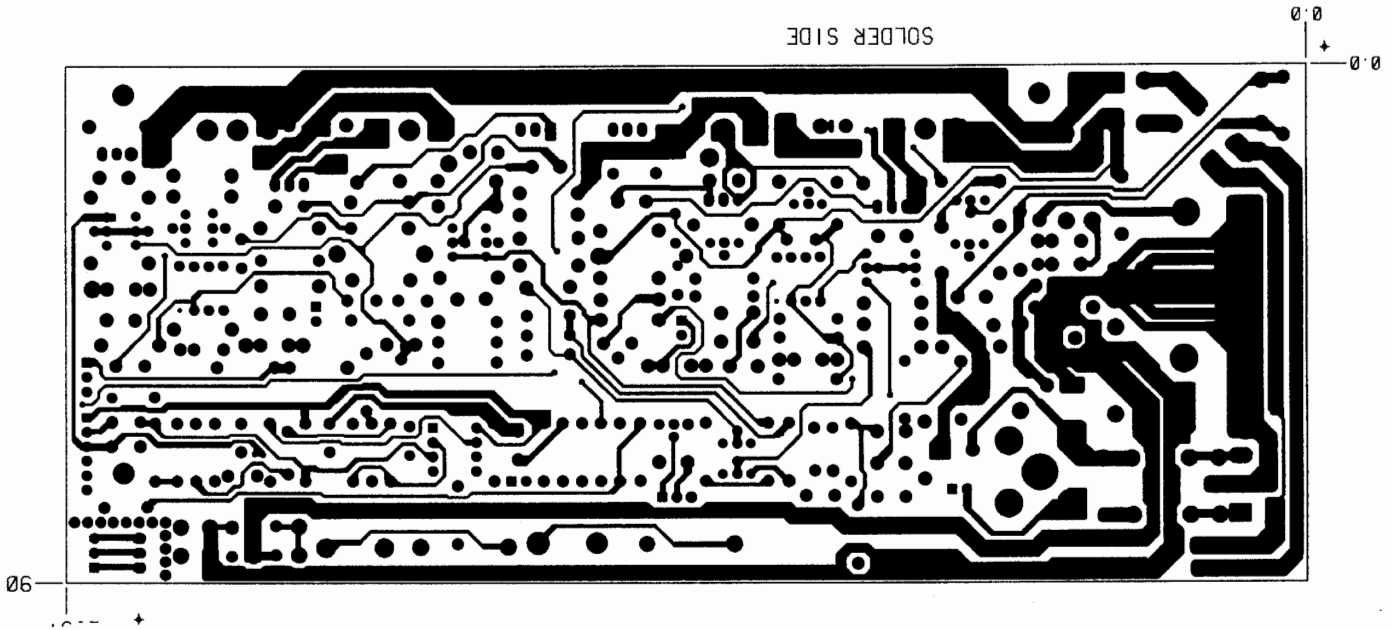
SOLDER SIDE
0.0
0.0
06

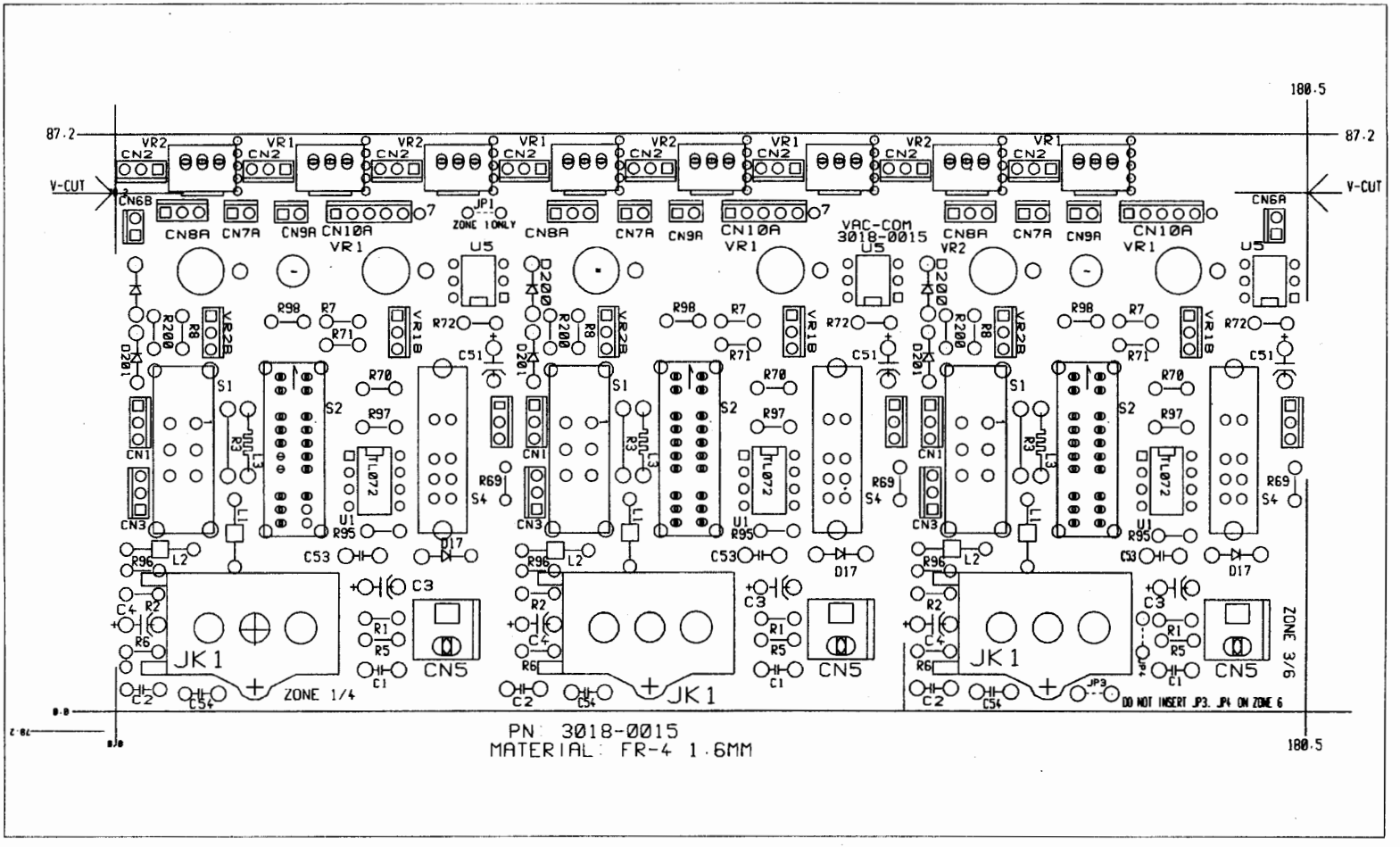

180.5
87.2
V-CUT
VAC-COM
3018-0015
JP1
ZONE 1 ONLY
ZONE 1/4
ZONE 3/6
DO NOT INSERT JP3, JP4 ON ZONE 6
PN: 3018-0015
MATERIAL: FR-4 1.6MM

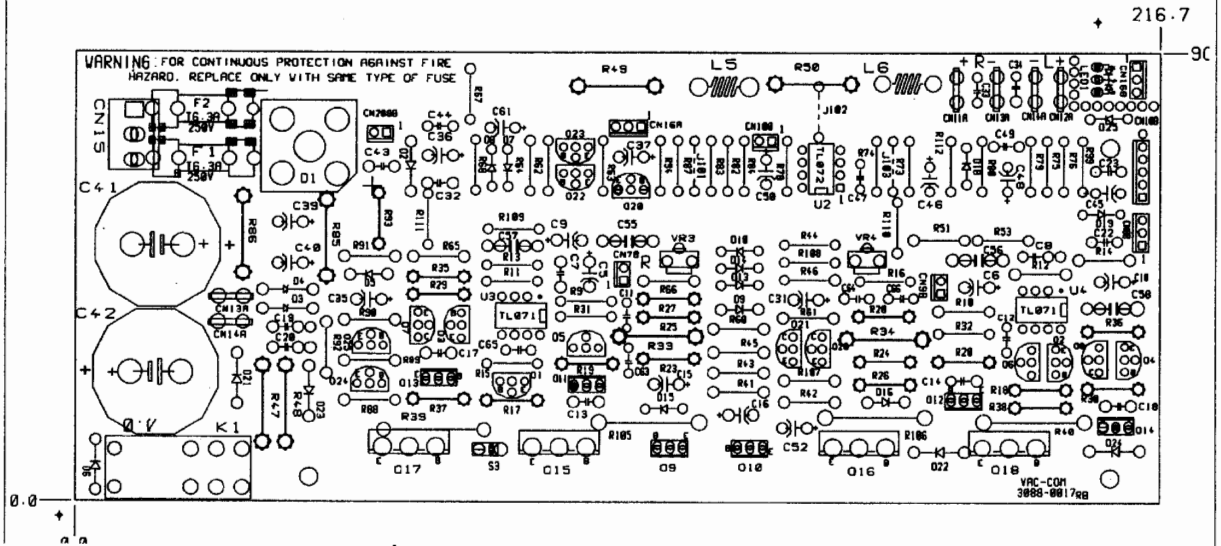
216.7
90
VARNING: FOR CONTINUOUS PROTECTION AGAINST FIRE HAZARD, REPLACE ONLY WITH SAME TYPE OF FUSE
CN1S
F2
F1
D1
C41
C42
K1
L5
L6
U2
TL071
VAC-COM
3088-0017RB
0.0

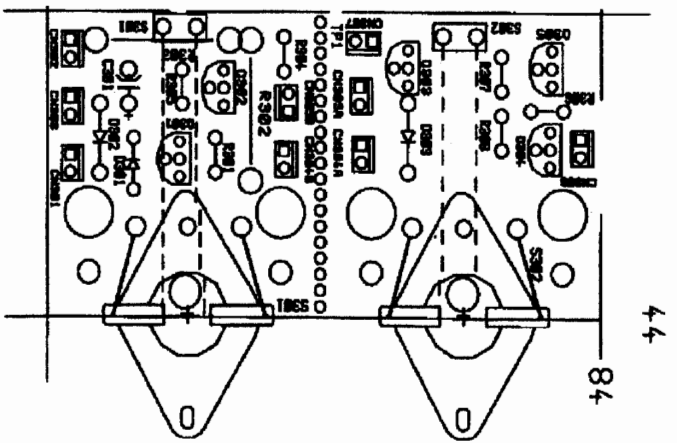
44
84

MA362
Electrical/Mechanical Parts Lists

Note:

These parts lists may contain some part numbers that are not valid, or No Longer Available.
Descriptions and Reference Designators, when included, should aid technicians in part substitution.
If necessary, call the Parts department at 1-516-496-3400 ext. 6553 for assistance.

MA-362 Parts List

Parts No.	Description	Q'ty		Designator
92-V1003	ASS'Y PCB- PX1275 MAIN AMP PCB	6	KIT	
11-3/CQ203SP	FUSE CLIP CQ-203SP FOR 5MM FUSE	24	EA	F1,F2
ADB-KBPC602	DIODE BRIDGE KBPC602 200V 6A	6	EA	D1
AIC-TL071	IC TL071(TI)	12	EA	U3,U4
AIC-TL072	IC TL072(JRC-NJM)	6	EA	U2
ARL-02-R002	RELAY 24V DPDT TRIH-24VDC-SB-2CM	6	EA	K1
ATR-2SB649A	TR.2SB649A	12	EA	Q13,14
ATR-2SB817E	TR.B817E/SANKEN A1492)	2	EA	Q17,18
ATR-2SD1047E	TR.D1047E/SANKEN C3856	2	EA	Q15,16
ATR-2SD669A	TR.2SD669A	12	EA	Q11,12
CN1-L25002-010	CNTR MALE L 2.5mm 2P EH A2502WR2	12	EA	CN208B,GND
CN1-L25003-010	CNTR MALE L 2.5mm 3P EH A2502WR2	6	EA	CN16A
CN1-L50803-001	CNTR WAFER L 5.08mm 3P(5081-WR)	6	EA	CN15
CN5-OT7007M-02-G	2P header	6	EA	CN100
CNA-RMC003	CNTR MALE 1P L 6.3 PIN(G20)	24	EA	CN11A-14A
ECE-050V688M-HP	CAP ELE 50V 6800uF +-20% 22*51 105	12	EA	C41,42
ELC-02-7001	COIL CHK 2uH +-10% L-R2U	12	EA	L5,L6
ERB-102K152J	RES MO 1W K 1K5 +-5% 15mm	12	EA	R33,34
ERB-102K4R7J	RES MO 1W K 4R7 +-5% 15mm	24	EA	R47,48,49,50
ERB-202K122J-S	RES MO 2W K 1K2 +-5% 15mm	12	EA	R85,86
ERB-202PR10J	RES MO 2W P 0.1 +-5%	24	EA	R39,40,105, 106
ERB-251K101J	RES MO 1/4W K 100 +-5%	6	EA	R93
ERB-251K222J	RES MO 1/4W K 2K2 +-5%	12	EA	R23,24
ERB-251K331J	RES MO 1/4W K 330 +-5%	12	EA	R37,38
ERB-251K470J	RES MO 1/4W K 47 +-5%	36	EA	R19,20,25,26 ,29,30
ERB-251K471J	RES MO 1/4W K 470 +-5%	30	EA	R17,18,35,36 ,84
ERB-251K681J	RES MO 1/4W K 680 +-5%	12	EA	R27,28
ERV-S06-501B01	VR SEMI ST S 6MMD 500B	12	EA	VR3,VR4
FUS-07-6301S	FUSE 5*20mm T6.3A/250V UTE	12	EA	F1,F2
TRL-7002	THERMAL PROTECTOR 17AM024A5	6	EA	S3
WAS-R1068	WIRE ASY #28 2547 2P 200MM EH /G	6	EA	CN7B(R-CH)
WAS-R1069	WIRE ASY #24 2468 3P 100MM EH	6	EA	CN8B
WAS-R1070	WIRE ASY #28 2547 2P 150MM EH GRY	6	EA	CN9B(L-CH)
WAS-R1071	WIRE ASY #24 2468 6P 100MM EH	6	EA	CN10B
92-V1004A	**ASS'Y PCB-VAC1004A PX1275 I/O PCB**	**1**	**KIT**	
AIC-LF353	IC OP LF353N NS (DIP)	3	EA	U1
AIC-4N25	IC OPTOCOUPLER 4N25	3	EA	U5
CN5-OT058	CNTR SINGLE ROW L 3P	6	EA	CN2
ECQ-100V104J	CAP MPP 100V 0.1u +-5%	3	EA	C53,54
ECE-025T106M-SK	CAP ELE 25V 10uF +-20% 4*7 105C	6	EA	C3,4
ECE-050T225M-SK	CAP ELE 50V 2.2uF +-20% 4*7 105C	3	EA	C51
JK3-S02-R002	JACK RCA S 2P 0860B-302-531	3	EA	JK1
SWS-R007	SW SLIDE 2P2T SS001-P022BQb-PA6	2	EA	S1
SWS-R008	SW SLIDE 2P3T SS016-P223MA-PB6	3	EA	S4
SWS-R009	SW SLIDE 4P4T SS001-P244Ojb-PA6	3	EA	S2
VRR-R023	VR ROT 10KA RD0971110046-11-15KQ	6	EA	VR1,VR2
TML-R0001	Mini T BLOCK HD515V-2P BLK	3	EA	CN5
TML-R0002	Mini T BLOCK HD515H-2P BLK	3	EA	CN5
CN1-L25002-010	CNTR MALE L 2.5mm 2P EH A2502WR2	3	EA	CN9A(L-CH)
CN1-L25002-011	CNTR MALE L 2.5mm 2P EH RED	3	EA	CN7A(R-CH)
CN1-L25003-010	CNTR MALE L 2.5mm 3P EH A2502WR2	3	EA	CN8A
CN1-L25006-010	CNTR MALE L 2.5mm 6P EH A2502WR2	2	EA	CN10A(ZONE 1 /3)
CN1-S25006-010	CNTR MALE S 2.5mm 6P EH A2502WV2-6	1	EA	CN10A(Rear Solder) ZONE 2 ONLY

TU2-S9010-100	TUBING S1 1mmD 10mm	6	PCS	C53,54
WAS-R1067	WIRE ASY #24 2468 2P 50MM EH	1	EA	CN6A(ZONE 3)
WAS-R1072	WIRE ASY #24 2468 3P 50MM EH	1	EA	CN1A(ZONE 3)
91-V1004	**ASS'Y PCB-VAC1004 I/O PCB AUTO INS**	**1**	**KIT**	
90-V1004	Bare I/O PCB FR4 180*87*1.6MM PX-1275	1	EA	
ECQ-100T104J	CAP MPP 100V 0.1u +-5% TAP	3	EA	C53,54
ECQ-100T331J	CAP PPNM 100V 330P +-5% TAP	6	EA	C1,2
ADD-1N4148*TAP52	DIODE Sw/ 1N4148 TAPING 52MM	3	EA	D17
ADD-1N4004*TAP52	DIODE RECTI 1N4004 TAPING 52MM	6	EA	D200,201
ELC-08-R001	COIL FER FB3560ST-650	6	EA	L1,L2
ERC-121Y102J	RES CF 1/8W Y 1K +-5%	12	EA	R1,2,97,98
ERC-121Y122J	RES CF 1/8W Y 1.2K +-5%	6	EA	R7,8
ERC-121Y222J	RES CF 1/8W Y 2K2 +-5%	6	EA	R200,69
ERC-121Y223J	RES CF 1/8W Y 22K +-5%	9	EA	R70,71,72
ERC-121Y473J	RES CF 1/8W Y 47K +-5%	12	EA	R5,6,95,96
W00-22005	WIRE TINNER COPPER #22 5MM	3	EA	JP1.JP3,JP4
W00-22010	WIRE TINNER COPPER #22 10MM	3	EA	L3
92-V1004B	**ASS'Y PCB-VAC1004B PX1275 I/O PCB**	**1**	**KIT**	
AIC-LF353	IC OP LF353N NS (DIP)	3	EA	U1
AIC-4N25	IC OPTOCOUPLER 4N25	3	EA	U5
CN5-OT058	CNTR SINGLE ROW L 3P	6	EA	CN2
ECQ-100V104J	CAP MPP 100V 0.1u +-5%	3	EA	C53,54
ECE-025T106M-SK	CAP ELE 25V 10uF +-20% 4*7 105C	6	EA	C3,4
ECE-050T225M-SK	CAP ELE 50V 2.2uF +-20% 4*7 105C	3	EA	C51
JK3-S02-R002	JACK RCA S 2P 0860B-302-531 Red/White	3	EA	JK1
SWS-R007	SW SLIDE 2P2T SS001-P022BQb-PA6	3	EA	S1
SWS-R008	SW SLIDE 2P3T SS016-P223MA-PB6	3	EA	S4
SWS-R009	SW SLIDE 4P4T SS001-P244Ojb-PA6	3	EA	S2
VRR-R023	VR ROT 10KA RD0971110046-11-15KQ	6	EA	VR1,VR2
TML-R0001	Mini T BLOCK HD515V-2P BLK	3	EA	CN5
TML-R0002	Mini T BLOCK HD515H-2P BLK	3	EA	CN5
CN1-L25002-010	CNTR MALE L 2.5mm 2P EH A2502WR2	3	EA	CN9A(L)
CN1-L25002-011	CNTR MALE L 2.5mm 2P EH RED	3	EA	CN7A(R)
CN1-S25002-010	CNTR MALE S 2.5mm 2P EH A2502WV2	1	EA	CN6B(ZONE4)
CN1-L25003-010	CNTR MALE L 2.5mm 3P EH A2502WR2	3	EA	CN8A
CN1-S25003-010	CNTR MALE S 2.5mm 3P EH A2502WV2	1	EA	CN1B(ZONE4)
CN1-L25006-010	CNTR MALE L 2.5mm 6P EH A2502WR2	3	EA	CN10A
TU2-S9010-100	TUBING S1 1mmD 10mm	6	PCS	C53,54
91-V1004	**ASS'Y PCB-VAC1004 I/O PCB AUTO INS**	**1**	**KIT**	
90-V1004	Bare I/O PCB FR4 180*87*1.6MM PX-1275	1	EA	
ECQ-100T104J	CAP MPP 100V 0.1u +-5% TAP	3	EA	C53,54
ECQ-100T331J	CAP PPNM 100V 330P +-5% TAP	6	EA	C1,2
ADD-1N4148*TAP52	DIODE Sw/ 1N4148 TAPING 52MM	3	EA	D17
ADD-1N4004*TAP52	DIODE RECTI 1N4004 TAPING 52MM	6	EA	D200,201
ELC-08-R001	COIL FER FB3560ST-650	6	EA	L1,L2
ERC-121Y102J	RES CF 1/8W Y 1K +-5%	12	EA	R1,2,97,98
ERC-121Y122J	RES CF 1/8W Y 1.2K +-5%	6	EA	R7,8
ERC-121Y222J	RES CF 1/8W Y 2K2 +-5%	6	EA	R200,69
ERC-121Y223J	RES CF 1/8W Y 22K +-5%	9	EA	R70,71,72
ERC-121Y473J	RES CF 1/8W Y 47K +-5%	12	EA	R5,6,95,96
W00-22005	WIRE TINNER COPPER #22 5MM	3	EA	JP1.JP3,JP4
W00-22010	WIRE TINNER COPPER #22 10MM	3	EA	L3
92-V1005	**ASS'Y PCB-VAC1005 PX1275 STB PCB**	**1**	**KIT**	
90-V1005	STB PCB FR4 190*66*1.6MM PX-1275	1	EA	
TML-R0003	MOLEX 15-24-7240(42385) HEADER	1	EA	CN12
TML-R0008	TML BLOCK 12P EK950V-12P-BK	2	EA	P1-P4,P5-P8
RM07P0019	INSULATOR FR700+9448 66*46.5*0.7 B	1	EA	
92-V1006	**ASS'Y PCB-VAC1006 PX1275 AC PCB**	**1**	**KIT**	

90-V1006	AC PCB FR4 181.2*63.3*1.6MM PX-127	1	EA	
ADD-1N4004*TAP52	DIODE RECTI 1N4004 TAPING 52MM	1	EA	D101
ADD-1N4148*TAP52	DIODE Sw/ 1N4148 TAPING 52MM	4	EA	D103,104,107 ,108
ADZ-UZ4-3BM	DIODE ZENER UZ-4.3BM 1/2W 4.1V-4.5	2	EA	D102,105
ATR-BF422	TR BF422 TAPING	1	EA	Q101
ECE-050T476M-KM	CAP ELE 50V 47uF +-20% 105C 6.3*11	1	EA	C104
ECW-275V472K	X-CAP HQX 0.0047uF/275V P=10MM	1	EA	C202
ECW-400V472M	CAP Y-SUPPRESSOR 400V 4700pF +-20%	1	EA	C203
ERC-251Y103J	RES CF 1/4W Y 10K +-5%	1	EA	R100
ERC-251Y223J	RES CF 1/4W Y 22K +-5%	1	EA	R103
ERB-202K122J	RES MO 2W K 1K2 +-5% 20mm	1	EA	R104
ERB-202K152J	RES MO 2W K 1K5 +-5% 20mm	1	EA	R101
ELC-09-R002H	COIL CM-MODE 0.75mH E-7243H RING C	1	EA	L201
11-3/CQ203SP	FUSE CLIP CQ-203SP FOR 5MM FUSE	8	EA	F201-204
FUS-07-4001S	FUSE 5*20mm T4A/250V UTE	4	EA	F201-204
CN1-L50802-001	CNTR WAFER L 5.08mm 2P(5081-WR)	7	EA	CN211B,212B, 213A,230_1,230_2,115_1,115_2
CN1-L50803-001	CNTR WAFER L 5.08mm 3P(5081-WR)	2	EA	CN200_1,200_ 2
CN1-S50802-001	CNTR WAFER S 5.08mm 2P(5081-WR)	2	EA	CN211A,212A
WAS-R1075	WIRE ASY 2P #24 2468 350MM EH	1	EA	CN208A-ZONE 3 CN208B
WAS-R1076	WIRE ASY 2P #24 2468 400MM EH	1	EA	CN209A-ZONE 2 CN208B
SWP-R003	SW PW PUSH TV-8 8212 CHILY	1	EA	S201
51-LM0615050	NTC THERMIXTOR LM0615050	2	EA	RT101,102
ARL-02-R001	RELAY 24V SPDT TRIH-24VDC-SB-1CE	1	EA	K201
92-V1007	**ASS'Y PCB-VAC1007 PX1275 FAN PCB**	**1**	**KIT**	
90-V1007	FAN PCB CEM-1 44*84*1.6MM PX-1275	1	EA	
ATR-BC337-40	TR BC337-40	1	EA	Q304
ATR-BC556B	TR BC556B TAPING	4	EA	Q301-303,305
ADZ-UZ12BM	DIODE ZENER UZ-12BM 12V	1	EA	D301
ADD-1N4004*TAP52	DIODE RECTI 1N4004 TAPING 52MM	2	EA	D302,303
ERB-202P101J	RES MO 2W P 100 +-5%	1	EA	R303
ERB-202P470J	RES MO 2W P 47 +-5%	1	EA	R302
ERC-121Y223J	RES CF 1/8W Y 22K +-5%	3	EA	R304,305,307
ERC-121Y562J	RES CF 1/8W Y 5.6K +-5%	3	EA	R301,306,308
ECE-025T107M-SK	CAP ELE 25V 100U +-20% 8*7 105C	1	EA	C301
TRL-R004	THERMALSTAR U-A HT1+FB5 NO 65C	2	EA	S301,302
CN1-S25002-010	CNTR MALE S 2.5mm 2P EH A2502WV2	4	EA	CN301,304A, 305A,306
CN1-S25402-702	CNTR MALE S 2.54MM 2P(XH)	3	EA	CN302,303,30 7
WAS-R1083	WIRE ASY 2P #24 300MM RED/BLK	2	EA	CN304A-304B, 305A-305B
WAS-R1084	WIRE ASSY 1P #22 100MM W/T250 RED	2	EA	S301
WAS-R1085	WIRE ASSY 1P #22 100MM W/T250 BLK	2	EA	S301
VAC014-01/C1	**MECH PARTS COMMON VAC014-01**	**1**	**KIT**	
501798	front panel, 482 mm, for model 1275			
15060245	Plastic housing Molex mini-fit, 24-pin connector			
15247240	Molex mini-fit plug, 24-pin			
560041R3	transformer, tto-10051-03(24.4v-0-24.4v/4.8A)x3, 1275			
3018-0070	Main chassis, 5/1500, 1250R/S, 1275			
3018-0066	Rear panel, model 1275			
3018-0003	top cover, 5/1500,1250R,1250S			
3018-0005	front sub-panel 5/1500,1250R/S			
RM05A1001	HANDLE PX1275 L-15004.BL	2	EA	REAR PANEL
RM05S1001	BKT FOR SINK PX1275 3018-0086	2	EA	SINK BKT
RM05S1005	BKT FOR PW SW 3018-0088 PX1275	1	EA	PW SW
RM05S1004	BKT FOR AC BOARD PX1275 4TTU-13	2	EA	
RM05S1003	BKT FOR XMER PX1275 3018-0020	2	EA	XMER
RM04B1001	BOSS M3*12	4	EA	I/O BOARD
71-JK/2AC-008A08	AC SOCKET 2AC-008A0810	1	pcs	JK201
SM3R0+06SFB	SCREW MACHINE 3*6 FLAT BLK	2	EA	ACIN*2 *2
SS3R0+06SBB	SCREW TRIANGLE 3*6 BIND BLK	6	EA	I/O*4,ACB*2,

SM3R0+06SPB	SCREW MACHINE 3*6 PAN BLK	6	EA	PW SW*4,FPNL *2
SS3R0+12SBB	SCREW TRIANGLE 3*12 BIND BLK	4	EA	FOOT*4
SP3R0+06SBB	SCREW TAPING 3*6 BIND BLK	32	EA	BKT-SINK BKT
SN3R0+08SBB	SCREW TAPING 3*8 N BLK	6	EA	RCA JACK
SM4R0+06SBB	SCREW MACHINE 4*6 BIND BLK	3	EA	R-PNL-BOT*3
SM4R0+10SFB-S	SCREW MACHINE 4*10 S FLAT BLK	10	EA	COVER
SS4R0+08SBB-C	SCREW TRIANGLE 4*8 BIND BLK C	13	EA	F-CH*9,R-PNL *4
SS4R0+12SBB-C	SCREW TRIANGLE 4*12 BIND BLK C	4	EA	XMER
N3R0D5R5D2R4TSN+	NUT M3 NI + GEAR WASHER	12	EA	FOOT*4,FAN*8
N4R0D7R0D3R5TSBF	NUT M4 BLK F/NUT	4	EA	XMER
WAS-R1074	WIRE ASY W/42475 MOLEX *12 WIRE	1	EA	CN14
WAS-R1077	WIRE ASY 2P #18 1015 150MM 508	1	EA	CN211A-CN211 B
WAS-R1078	WIRE ASY 2P #18 1015 150mm 508	1	EA	CN212A-CN212 B
WAS-R1079	WIRE ASY 2P #18 1015 360mm 508-10m	1	EA	AC-CN213A
WAS-R1082	WIRE 1P #16 100MM GRN/YEL W/TML	1	EA	EARTH
ECW-275V104K	X-CAP 14104 0.1uF/275V	1	EA	C201
TU1-B0070-020	TUBING SHRINK BLK 7MMD 20MM	3	EA	AC JACK
TU2-S9010-050	TUBING S1 1mmD 5mm	2	PCS	C201
EMX-1002	CABLE TIE BINDING (YJ-80)	30	EA	
RM09P0007	FOOT 4TSA-18A 50F*18H FOR PX1275	4	EA	
RM11P1002	KNOB 4TNJ-10 FA-1500 FOR PX1275 PW	1	EA	PW SW
13-4019	KNOB 10*10 FOR LEVEL	12	EA	FOR I/O VR
ASY-TMLR0004	Molex 15-06-0245 Plug plus Wiring	1	EA	Assembly
SM-P6+32+08SSB	SCREW P6-32*8	1	EA	EARTH
N30+06+32NI	NUT 3m/m NI	1	pcs	EARTH
RM09R0003	GASKET 30*40*12MM	1	EA	FOR LED
FAN-R002	DC24V FAN JF1225B1M-257	2	EA	
M09-R622	RUBBER FOOT NF-008	8	EA	FOR FAN
SM3R0+40SMB	SCREW MACHINE 3*40	8	EA	FOR FAN
SS-R006	SCREW P6#32*6 BIND BLK	6	EA	
RM04S1001	BOSS STEEL #6-32 10MM	6	EA	VAC
ST3R0+10SBB	SCREW TAPPING 3*10 BAND BLK	4	EA	FAN PCB
WAS-R1087	WIRE ASY 2P #24 300MM FOR FAN TO C	2	EA	
SM5R0+06SPB	SCREW MACHINE 5*6 PAN BLK	4	EA	HANDLE
EMX-1005	CABLE TIE BINDING (YJ-185)	1	EA	
TU3-W0010-070	Glass tube blk 10 *70mm	6	EA	
PKG-VAC014-01	**PACKAGE VAC014-01**	**1**	**KIT**	
WPC-7008*D	PW CORD AL201+501 SJT 16/3C 105 6F	1	EA	
RM901021	CARTON OUTER FOR PX1275	1	EA	
RM901022	CARTON INNER FOR PX1275	1	EA	
RM941006	EPE BUFFER FOR PX1275	2	EA	
RM930005	POLY BAG 30"*35"*0.08	1	EA	For Set
13-6006	POLY BAG 4x12"x0.08mm	2	EA	For PW Cord/Accessory
RM950012	MANUAL FOR PX1275 QUICK START	1	EA	
RM950013	M362 README FOR PX1275	1	EA	
RM950014	US CUSTOM INSTALL FOR PX1275	1	EA	
RM950015	SAFETY PRECAUTION FOR PX1275	1	EA	
RM950016	WARRANTY CARD FOR AUDIO ACCESS	1	EA	
13-6005	POLY BAG 10x14"*0.05mm	0.1	Kg	For Manual
SUB-ASSAMBLIES				
AMP-working Module93-V1003), with heatsink & wire hardness		**1**	**KIT**	
IO-working Module-A 92-V1004A), with standoffs& wire hardne		**1**	**KIT**	
IO-working Module-A 92-V1004B),with standoffs & wire hardne		**1**	**KIT**	
STB-working Module 92-V1005)		**1**	**KIT**	
AC-working Module 92-V1006)		**1**	**KIT**	
FAN-working Module 92-V1007), with wire hardness		**1**	**KIT**	

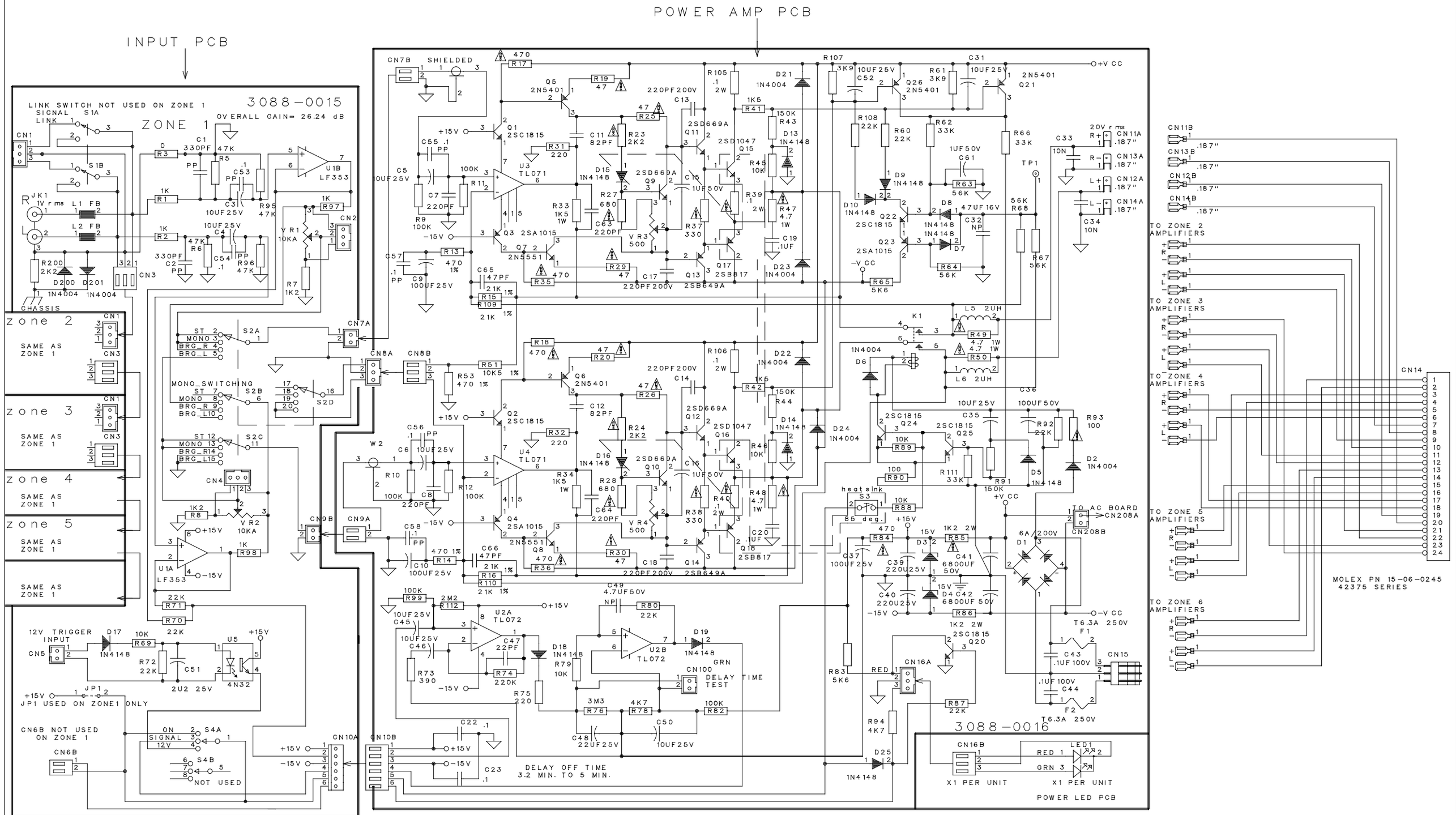

REV : C

1. ADJUST GAIN TO 26dB- R13,R14,R53 CHANGED TO 470 OMH

2. TO REDUCE THE MINIMUM TRIGGER VOLTAGE TO 3V -CHANGE R72 TO 22K
3. TO INCREASE DC THRESHOLD FOR PROTECTION- CHANGED R63,R64,R67,R68 TO 56K
4. TO INCREASE THE DAMPING FACTOR- CHANGED R33, R34 CHANGED TO 4K7 1/4W, CARBON FILM
5. TO SUM THE LED DRIVE SIGNAL FROM ALL CHANNEL- CHANGED CN10A,CN10B TO 6-CONDUCTOR HEADER AND ADDED DIODE D25 ON EACH ZONE AMPLIFIER

6. TO IMPROVE THE SOUND, CHANGED U1 TO LF353
7. ADD C51,C54,C55,C56,C57,C58, ALL IN POLYPROPYLENE, 0.1UF63V, MADE BY WIMA
8. MATERIAL OF C1, C2 CHANGED TO POLYPROPYLENE

REV: D 8/26/01 IMPROVED OUTPUT NOISE, 20KHZ THD, AND DAMPING FACTOR

1. R15,R16 CHANGED TO 21K 1%
2. ADDED R109,R110, 21K 1%
3. R33,R34 CHANGED BACK TO 1K5, 1W
4. R43,R44 CHANGED TO 150K FROM 100K
5. ADDED R111, 33K
6. ADDED C61, 1UF50V
7. ADDED C63,C64, 220PF50V
8. RECONNECTED AND CHANGED R99 TO 100K FROM 220K
9. ADDED R112, 2M2
10. ADDED C65,C66, 47PF/50V
11. CHANGED LOCATIONS OF C11,C12
12. C1,C2,C55,C56,C57,C58 USE POLYPROPYLENE MATERAIL

IMPORTANT NOTES:

1. RESISTORS MARKED WITH ARE FLAME RETARD, INSERT 5 MM ABOVE THE PC BOARD SURFACE WHEN SERVICING.
2. UNLESS SPECIFIED OTHERWISE, ALL RESISTORS IN 1/4W, 5% TOLERANCE
3. UNLESS SPECIFIED OTHERWISE, ALL CAPACITORS IN 50V RATING

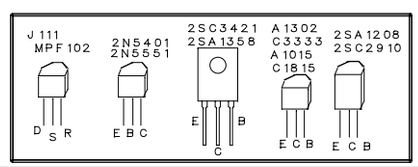

D24
C66
R112

VAC-COM, INC.		
Title: 50W STERO POWER AMP		
Size: C	Document Number: 3088-0015, 0016	REV: D
Date: September 19, 2001	Sheet 1 of 1	

TO ZONE 3
CN208B

TO ZONE 2
CN208B

W208

W209

1K5 2W

803261
POWER INPUT BOARD

CN208A

CN209A

CN210A

D102 4V3

D103 1N4148

D104 1N4148

D105 4V3

D107 1N4148

D108 1N4148

R101

1K2 2W R104

10K R100

R103 22K

C104 47UF50V

Q101 2N5551

D101 1N4004

TV-8 POWER SWITCH

CN211A

S201

CN212A

W212

RT101 NTC

CN211B

W211

RT102 NTC

CN212B

CN213A

W213

L201
CM CHOKE

.0047UF250V C202

C201 .22UF250V

K201

RELAY DPST
8AX2

JK201

IEC FEMALE

W214

C203 .0047UF250V

TO ZONE 1,2,3 AMPLIFIERS

230V

115V

XFORMER T1

CN230_1

CN115_1

CN200_1

CN215
NOT USED

F201 T4A/250V

F202 T4A/250V

TO ZONE 4,5,6 AMPLIFIERS

230V

115V

XFORMER
T2

CN230_2

CN115_2

CN200_2

F203 T4A/250V

F204 T4A/250V

⚠ WARNING:

WHEN SERVICE, REPLACE ONLY WITH THE SAME TYPE OF COMPONENT

VAC-COM, INC.		
Title: 1275-POWER SUPPLY		
Size: A	Document Number: 803261	REV: D

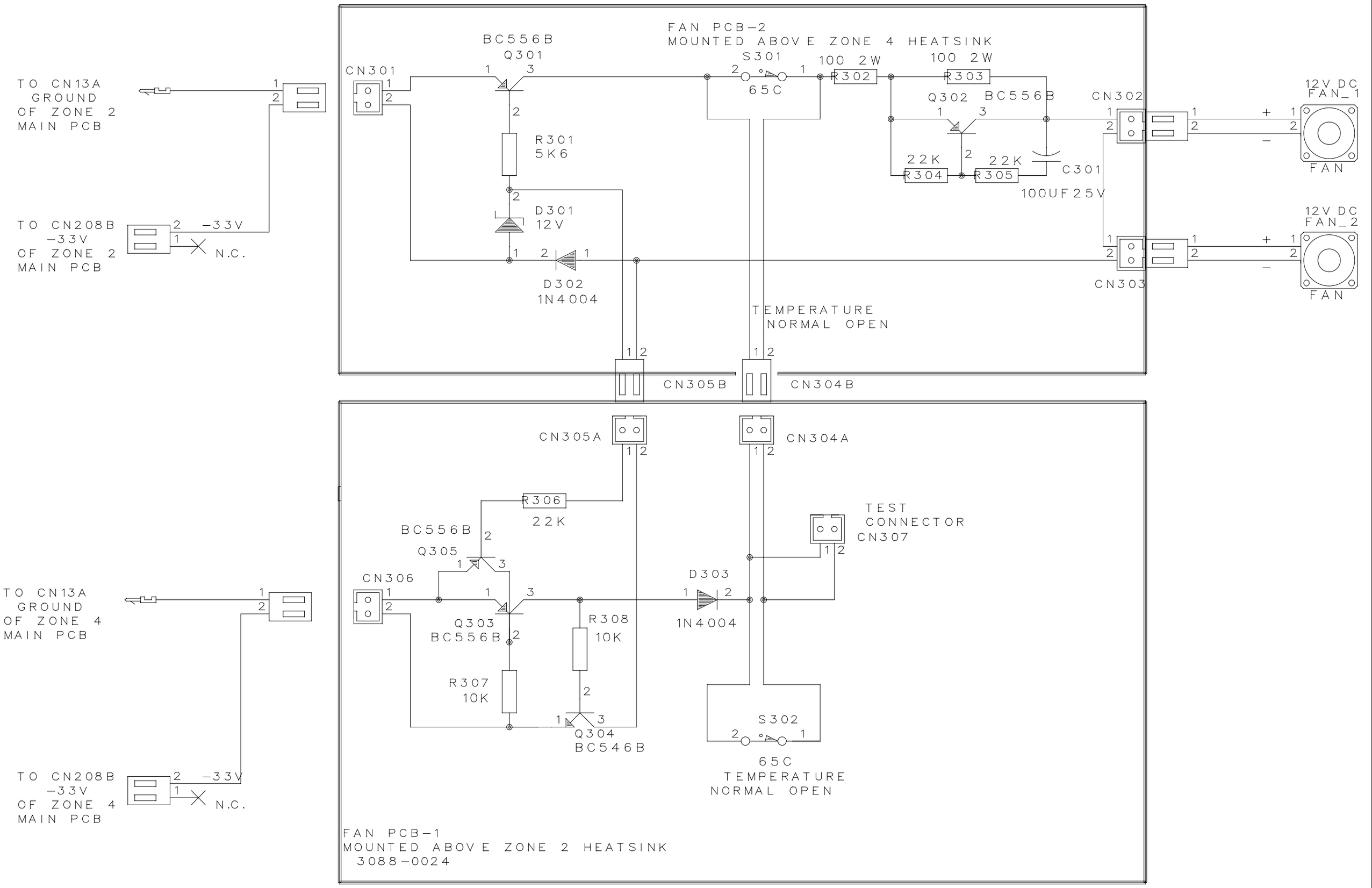

Title	FAN CIRCUIT–PX1275	
Size	Document Number	REV
A	3088–0024	B

MOLEX PN: MOLEX PN 15-24-7240
42385 SERIES

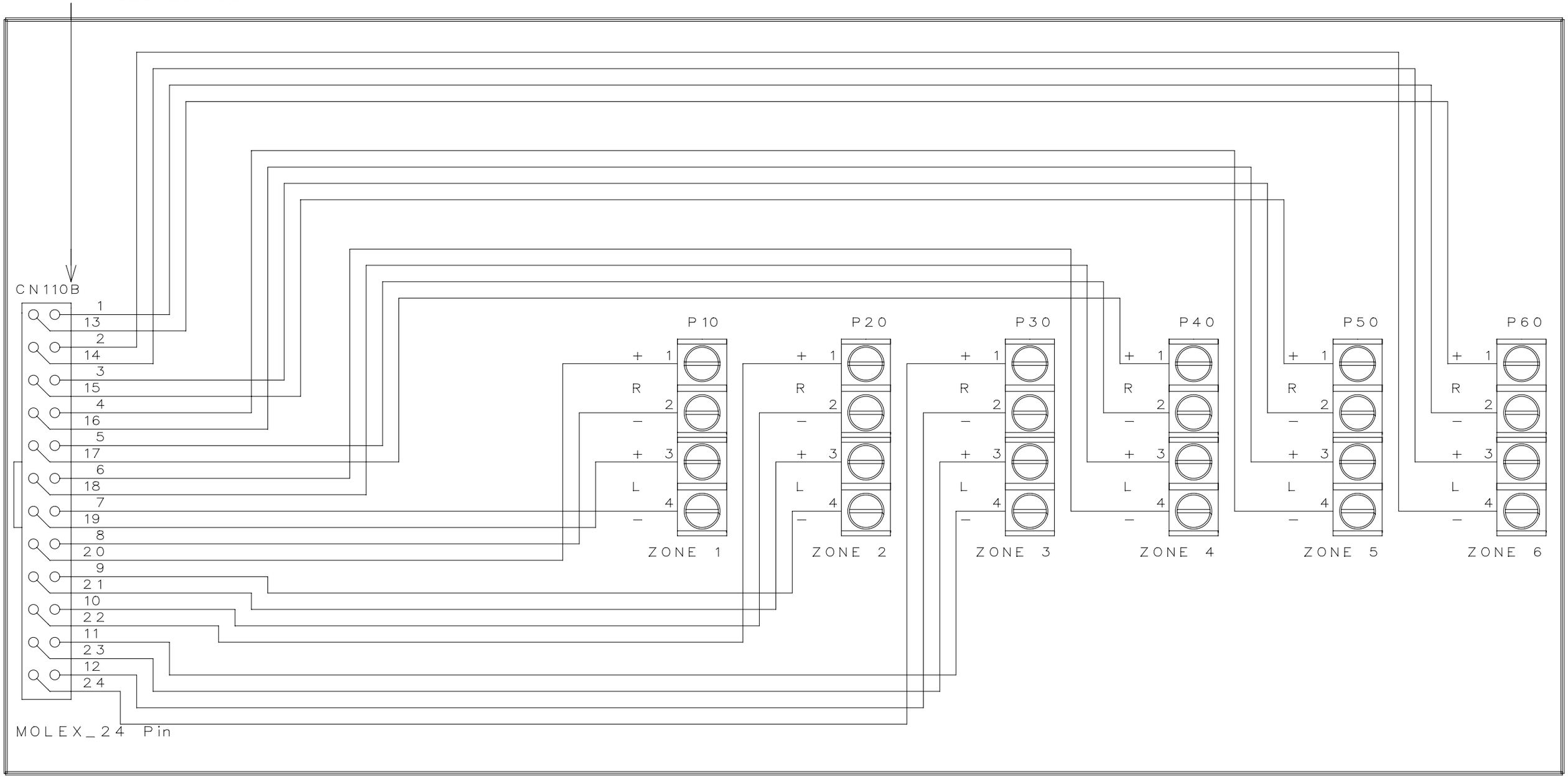

FR4 1.6MM DOUBLE-SIDED PCB 190.5 X 66.0 MM

Size	Document Number	REV
A	3088-0016	D